AL ATASSI

Techno ice

الأتاسي

لصناعة و تجارة التكييف والتبريد المحدودة المسؤولية

الجمهورية العربية السورية (الإدارة العامة) دمشق ص.ب 14447 هاتف 8811178 11 963+ فاكس 8888925 11 963+
المعمل: دوما . دوير . تلفاكس 5813777 11 963+ موقع الإنترنت: www.alatassi-group.com البريد الإلكتروني info@alatassi-group.com

UNIT COOLERS

APPLIATIONS:

This range of cubic unit coolers consist of 35 models and has designed for commercial chilling applications at high and medium temperature [(ACR series) available in cooling capacities from 3006 W up to 38845 W], and for commercial freezing applications at low temperature [(ACC series) available in cooling capacities from 3938 W up to 37898 W], and for commercial blast freezing applications at low temperature [(ABF series) available in cooling capacities from 17400 W up to 35803 W].

Technical Features

Finned coils:

Constructed using copper tubes of 16 mm (5/8") diameter, and aluminum corrugated fins.

The arrangement of the copper tubes across self-spaced fins, the accurate link between tubes and fins as well as the use of corrugated fins allow our finned coils to reach high performance.

Fin spacing is 4.5 mm (5.64 f.p.i.) in the ACR series unit coolers and 7 mm (3.63 f.p.i.) in the ACC series unit coolers and 10 mm (2.54 f.p.i.) in the ABF series unit coolers. Every coil has been subjected to a leakage test under a rated pressure of 3000 kpa and then pressurized using nitrogen at 1000 kpa in order to avoid the corrosion of the inner surface of the copper tubes.

Casework:

The case structure of the unit cooler is fabricated from galvanized steel; its external surface is epoxy-polyester painted and then baked and cured at 180 ºC giving it a high protection against corrosion even in extreme environmental conditions; moreover this casing allows to meet more demanding food hygiene standards. Includes double drip tray to make the drainage of the water (resulting from defrost) easier.

For better maintenance, drip tray and end plates are readily dismounted from the casework giving an easy and fast access to the inside of the unit cooler.

Fans and motors:

Fans' diameter is 350 mm or 450 mm (depending on model) in those models with external rotor single-phase motors (220 -240 V/50 Hz) or 3-phase motor (380-400 V/50 Hz), or 500 mm or 630 (depending on model) in those models with external rotor 3-phase motors(220-240 V/380-400 V@50 Hz).All motors have class B insulation, grade IP-44 protection, a thermal protection device and work on a temperature range from -45 ºC up to +45 ºC. Painted fan guards are made of zinc plated steel wire and support a water tight terminal box where the fans' motors are wired.

Electric defrost:

Electric heaters are included in the ACC series and are optional in the ACR series. They are shielded by a stainless steel tube and their terminals are vulcanized over it to avoid electric shunts; every heater includes a single ground wire. They are strategically located across the finned coil in order to provide suitable and uniform defrosting.

Cooling capacities:

The stated cooling capacity is established according to ENV328 standard test condition 2 [refrigerant evaporation temperature -7 ºC and entering air temperature 0 ºC] for the ACR and ACC series unit coolers.

Other stated values for cooling capacities on tables are related to several evaporation and cold room temperatures and are valid for wet fin surface condition [increasing in 25% (ACR series) or 12% (ACC series) the stated values for dry fin surface].

Cooler selection:

The cooling capacity shown on the tables of selection is referred to the TD i.e., the temperature difference at the cooler, defined as the temperature difference between the entering air temperature and the temperature corresponding to the saturated refrigerant pressure at the unit cooler outlet.

Shown on the tables are data of cooling capacities for TD corresponding to 5, 7, 8, 10 ºC corresponding to an evaporation temperature of -5 ºC for the ACR series unit coolers and -5 ºC /-25 ºC for the ACC series unit coolers.

The cooling capacity has been fixed using refrigerant R22. When using other refrigerants like, for example, R134a or R404a, please multiply it by the corresponding correction factor shown on the following tables:

ACR-	30	38	45	55	67	78	91	110	123	154	181	193	216	293	343	388
R134a	1.013	0.958	0.868	0.86	0.903	0.865	0.908	0.898	0.91	0.941	0.893	0.856	0.844	0.871	0.931	0.935
R404a	1.093	1.028	0.971	0.966	0.994	0.969	0.991	0.986	0.992	1.021	0.981	0.979	0.969	0.985	1.021	1.025
ACC-	39	47	53	63	79	94	120	136	164	189	220	257	287	327	379	
R 134a	0.911	0.907	0.905	0.94	0.926	0.931	0.931	0.949	0.921	0.847	0.931	0.946	0.953	0.932	0.912	
R 404a	1.072	1.076	1.048	1.105	1.085	1.08	1.086	1.102	1.021	0.995	1.056	1.109	1.12	1.021	1.056	

Correction factors for the unit coolers' cooling capacity shown on tables (using R22 refrigerant) when using R134a or R404a refrigerants instead R22. [ACR & ACC series @ T_{ev} = -7 ºC / TD = 7 ºC].

الأتاسي
لصناعة و تجارة التكييف والتبريد المحدودة المسؤولية

ACR SERIES

Fin spacing: 4.5 mm

MODEL	CAPACITY	ENV 328 cond. 2	Tev =-5℃				SURFACE	AIR FLOW	AIR THROW
			TD = 5	TD = 7	TD = 8	TD = 10	m_2	m_3/h	m*
ACR-30	W	2,647	2,008	2,632	3,006	3,751	34.48	3,240	17
ACR-38	W	3,386	2,580	3,367	3,845	4,797	43.10	4,050	13
ACR-45	W	3,950	3,115	4,066	4,558	5,594	51.72	3,240	25
ACR-55	W	4,806	3,749	4,895	5,487	6,797	60.33	4,200	21
ACR-67	W	5,959	4,639	6,056	6,789	8,441	76.78	5,250	20
ACR-78	W	6,909	5,336	6,964	7,845	9,788	90.50	6,300	22
ACR-91	W	7,995	6,232	8,140	9,127	11,330	100.56	7,000	28
ACR-110	W	9,672	7,555	9,869	11,066	13,708	120.67	8,400	27
ACR-123	W	10,792	8,401	10,987	12,324	15,314	120.67	12,000	32
ACR-154	W	13,242	10,480	13,750	15,439	18,908	143.65	10,000	32
ACR-181	W	15,551	12,304	16,152	18,139	22,219	172.14	10,800	29
ACR-193	W	16,533	13,066	17,182	19,305	23,664	172.14	12,000	31
ACR-216	W	18,526	14,650	19,251	21,624	26,497	201.12	12,600	42
ACR-293	W	24,770	19,265	25,963	29,384	36,375	229.85	16,000	46
ACR-343	W	29,002	22,074	30,208	34,341	42,763	287.31	18,000	42
ACR-388	W	31,948	22,989	33,585	38,845	49,459	344.77	21,600	44

ACC SERIES

Fin spacing: 7 mm

MODEL	CAPACITY	ENV 328 cond. 2	Tev =-5℃				Tev =-25℃				SURFACE	AIR FLOW	AIR THROW
			TD =5	TD =7	TD =8	TD=10	TD =5	TD =7	TD =8	TD=10	m²	m³/h	m
ACC-39	W	3,596	2,616	3,713	4,161	5,091	2,481	3,454	3,938	4,868	29.45	4,050	21
ACC-47	W	4,411	3,219	4,574	5,130	6,273	2,923	4,091	4,673	5,832	35.21	3,240	20
ACC-53	W	4,949	3,611	5,131	5,755	7,036	3,313	4,634	5,291	6,603	41.08	3,780	22
ACC-63	W	5,769	4,210	5,980	6,706	8,143	3,936	5,498	6,276	7,758	57.06	6,300	27
ACC-79	W	6,940	5,509	7,244	8,138	9,974	4,869	6,948	7,979	10,038	54.78	5,315	25
ACC-94	W	8,027	6,377	8,361	9,812	11,490	5,814	8,221	9,418	11,804	68.47	6,300	30
ACC120	W	11,278	8,176	11,714	13,158	16,791	7,385	10,492	12,036	15,115	78.25	10,800	28
ACC136	W	12,758	9,890	13,108	15,433	19,800	8,326	11,756	13,632	17,365	97.81	9,000	42
ACC164	W	15,790	11,757	16,267	18,311	22,502	9,716	14,208	16,435	20,864	117.38	10,800	42
ACC189	W	17,460	13,207	18,200	20,463	27,801	11,418	16,447	18,945	23,916	136.94	12,600	44
ACC220	W	20,152	15,683	20,758	24,429	31,326	12,951	18,944	21,915	27,823	156.50	14,400	45
ACC257	W	25,765	19,650	26,374	29,810	36,841	13,877	21,856	25,768	33,512	195.63	18,000	44
ACC287	W	31,336	23,796	32,622	37,101	46,231	15,201	23,544	28,779	39,006	234.75	24,000	42
ACC327	W	34,289	25,913	35,119	39,813	49,393	16,922	27,310	32,689	43,287	264.10	24,300	42
ACC379	W	38,050	29,019	39,023	44,138	54,590	20,112	32,055	37,898	49,457	293.44	27,000	44

الأتاسي
لصناعة و تجارة التكييف والتبريد المحدودة المسؤولية

ABF SERIES

Fin spacing: 10 mm

MODEL blast-freeze	CAPACITY	Tev =-27℃				Tev =-41℃				SURFACE	AIR FLOW	AIR THROW
		TD = 5	TD = 7	TD = 8	TD=10	TD = 5	TD = 7	TD = 8	TD=10	m²	m³/h	m
ABF-20	W	11,070	15,453	17,634	21,795	10,626	15,139	17,400	21,899	122.4	20,000	42
ABF-25	W	13,721	19,226	21,968	27,185	12,680	18,325	21,150	26,762	153	22,500	44
ABF-30	W	16,762	23,613	27,024	33,477	14,753	21,783	25,290	32,255	191	27,500	44
ABF-40	W	26,981	35,160	38,856	45,333	25,137	32,617	35,803	43,137	229.2	33,500	44

Common features:

MODEL	FAN		Power & Current Consumption			Elec. Heaters	
	NO	DIM (cm)	W	230 V (A)	400 V	W	A
ACR-30	2	35	270	1.46	0.84	3,600	15.65
ACR-38--ACC-39	2	35	270	1.46	0.84	3,600	15.65
ACR-45--ACC-47	2	35	270	1.46	0.84	3,600	15.65
ACR-55--ACC-53	2	35	270	1.46	0.84	5,640	24.52
ACR-67	2	35	270	1.46	0.84	5,640	24.52
ACR-78	2	35	270	1.46	0.84	5,640	24.52
ACC-63	2	35	270	1.46	0.84	6,840	29.74
ACC-79	2	35	270	1.46	0.84	6,840	29.74
ACR91—ACC94	2	35 --- 45	270--700/800	1.46 --4.2	0.84--1.40	6,840	29.74
ACR-110	2	35	270	1.46	0.84	6,840	29.74
ACR123--ACC120	2	45	700/800	3.1	1.40	7,200	31.30
ACR154--ACC136	2	45	700/800	3.1	1.40	7,200	31.30
ACR181--ACC164	2	45	700/800	3.1	1.40	10,800	46.96
ACR-193	2	50	1,660	------	3.30	10,800	46.96
ACR216--ACC189	2	50	1,660	------	3.30	10,800	46.96
ACR293--ACC220	2	50	1,660	------	3.30	10,800	46.96
ABF-20	3	50	2,490	------	4.95	10,800	46.96
ACR343--ACC257	3 ----- 2	50---- 63	2,490---1,300	------	4.95--2.68	16,920	73.57
ABF-25	3	50	2,490	------	4.95	22,560	102.6
ACR388--ACC287	3	50	2,490	------	4.95	27,360	124.4
ACC-327	3	50	2,490	------	4.95	27,360	124.4
ACC-379--ABF-30	3 --- 4	63 ---50	1,950---3,320	------	6.6---4.08	27,360	124.4
ABF-40	3	63	1,950	------	6.6	28,200	128.2

DRAINAGE													Ø
MODEL	-----	-----	ACR-30	ACR-38	ACR-45	ACR-55	ACR-67	ACR-78	-----	-----	ACR-91	ACR-110	1"
	-----	-----	-----	ACC-39	ACC-47	ACC-53	-----	-----	ACC-63	ACC-79	ACC-94	-----	
	ACR-123	ACR-154	ACR-181	ACR-193	ACR-216	ACR-293	ACR-343	ACR-388	-----	-----	-----	-----	1 1/4"
	ACC-120	ACC-136	ACC-164	-----	ACC-189	ACC-220	ACC-257	ACC-287	ACC-327	ACC-379	-----	-----	
	-----	-----	-----	-----	-----	-----	-----	-----	ABF-20	ABF-25	ABF-30	-----	1 1/2"
	-----	-----	-----	-----	-----	-----	-----	-----	-----	-----	-----	ABF-40	2"

الأتاسي
لصناعة و تجارة التكييف والتبريد المحدودة المسؤولية

MODEL	FAN		A [mm]	B [mm]	C [mm]	D [mm]	E [mm]	ø inlet [mm]	ø outlet [mm]
	NO	DIM (cm)							
ACR-30	2	35	1150	930	480	440	480	1/2"	5/8"
ACR-38--ACC-39	2	35	1150	930	480	440	580	1/2"	5/8"
ACR-45--ACC-47	2	35	1150	930	560	520	480	1/2"	5/8"
ACR-55--ACC-53	2	35	1400	1080	560	520	480	1/2"	5/8"
ACR-67	2	35	1400	1080	560	520	580	1/2"	7/8"
ACR-78	2	35	1400	1080	560	520	680	1/2"	7/8"
ACC-63	2	35	1650	1430	560	520	580	1/2"	7/8"
ACC-79	2	35	1650	1430	560	520	480	5/8"	1 1/8"
ACR91—ACC94	2	35 - 45	1650	1430	560	520	580	1/2"-5/8"	7/8"-- 1 1/8"
ACR-110	2	35	1650	1430	560	520	680	5/8"	1 1/8"
ACR123--ACC120	2	45	2250	2040	480	440	680	5/8"	1 1/8"
ACR154--ACC136	2	45	2250	2040	560	520	580	5/8"	1 1/8"--1 3/8"
ACR181--ACC164	2	45	2250	2040	560	520	680	5/8"	1 3/8"
ACR-193	2	50	2250	2040	560	520	680	5/8"	1 3/8"
ACR216--ACC189	2	50	2250	2040	560	520	780	5/8"	1 3/8"
ACR293--ACC220	2	50	2250	2040	560	520	880	5/8"-7/8"	1 3/8"
ABF-20	3	50	2250	2040	560	520	1080	7/8"	1 5/8"
ACR343--ACC257	3 ---2	50-- 63	2750	2540	560	520	880	7/8"	1 5/8"
ABF-25	3	50	2750	2540	560	520	1080	1 1/8"	1 5/8"
ACR388--ACC287	3	50	3250	3040	560	520	880	7/8"	1 5/8"
ACC-327	3	50	3250	3040	560	520	980	7/8"	1 5/8"
ACC-379--ABF-30	3 -- 4	63 --50	3250	3040	560	520	1080	7/8"-1 1/8"	1 5/8"
ABF-40	3	63	4250	4040	560	520	980	1 5/8"	2 1/8"

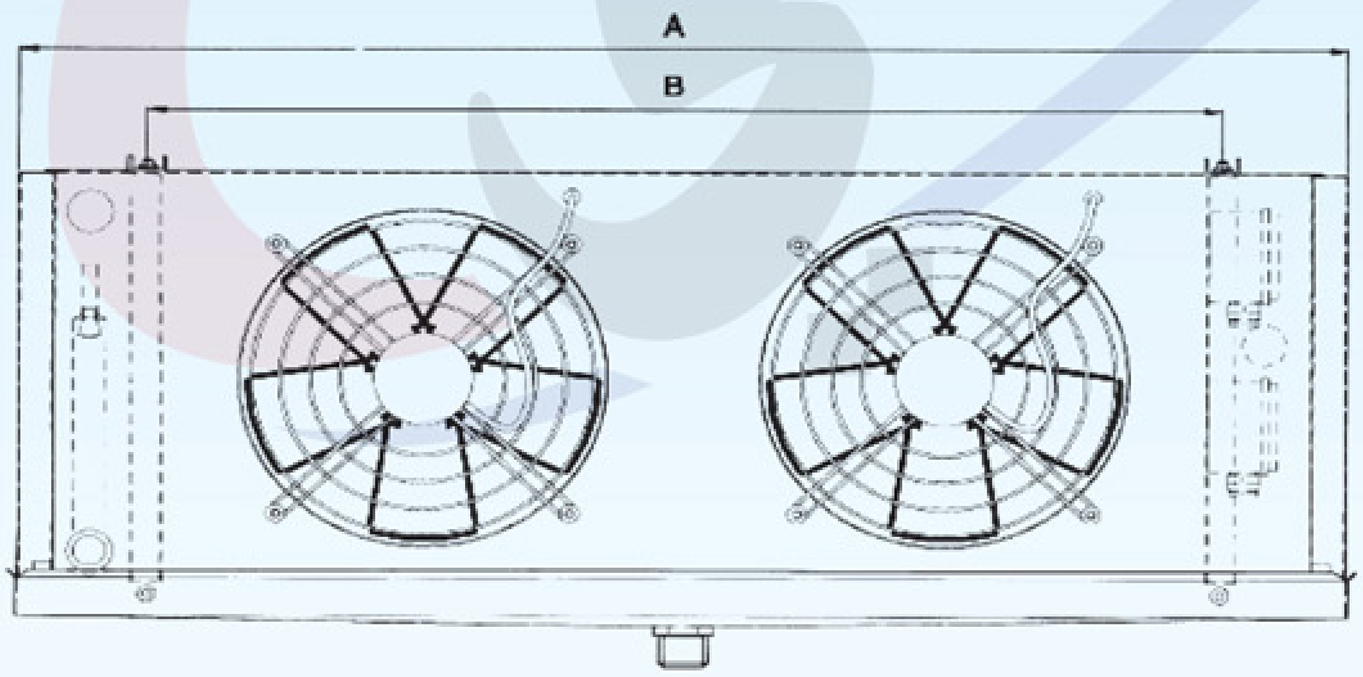

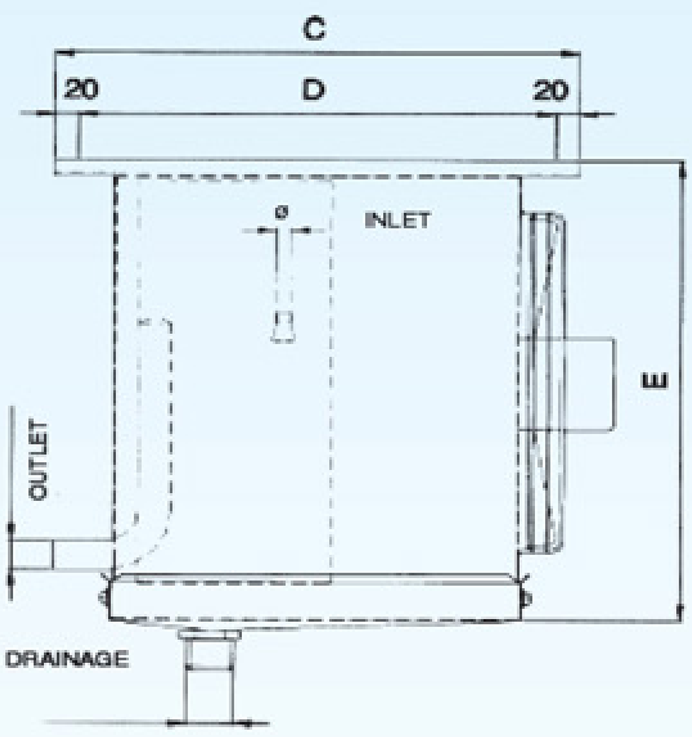

الأتاسي
لصناعة و تجارة التكييف والتبريد المحدودة المسؤولية

SELECTION CHART

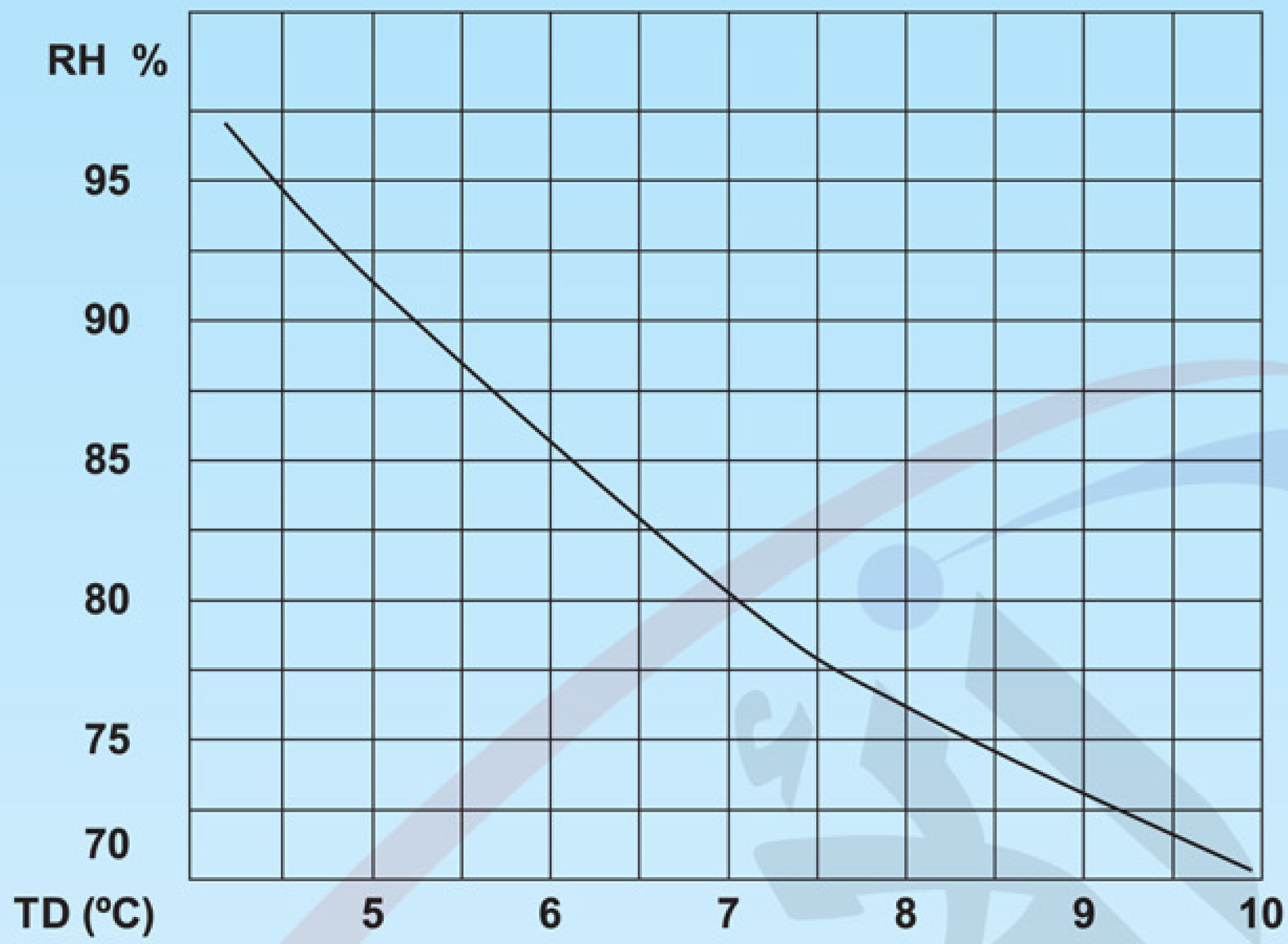

Use:

The choice of the suitable "TD" for an unit cooler working inside a cold storage room depends on the relative humidity the goods to be stored need. To select the "TD" using this chart we must draw one horizontal straight line from the relative humidity percentage wanted up to cut the plotted curve, then, we draw one downwards line from the crossover point up to cut the horizontal axis. At this point we read the "TD" value we are looking for.

Usually designers and technicians work considering that the cold room temperature is equal to entering air temperature at the coil's unit cooler. Such approximation do not cause a loss of accuracy in the unit cooler's selection. Thus, we consider $T_{ea} = T_{cr}$ and so: $TD = T_{cr} - T_{ev}$.

Example:

(using the cooling capacity table on page 2)

	Given:
Capacity required:	Q = 8100 W
Room temperature:	T_{cr} = -17 ºC
Evaporating temperature:	T_{ev} = -25 ºC
Refrigerant:	R 22

From the given data (considering $T_{ea} = T_{cr}$):

$TD = T_{cr} - T_{ev}$ = -17 ºC - (-25 ºC) = 8 ºC

From a TD = 8 ºC and a Q = 8100 W we select the following model of unit cooler:

ACC-94

الأتاسي
لصناعة و تجارة التكييف والتبريد المحدودة المسؤولية